## Assignment Part 1: Linear Extrusion

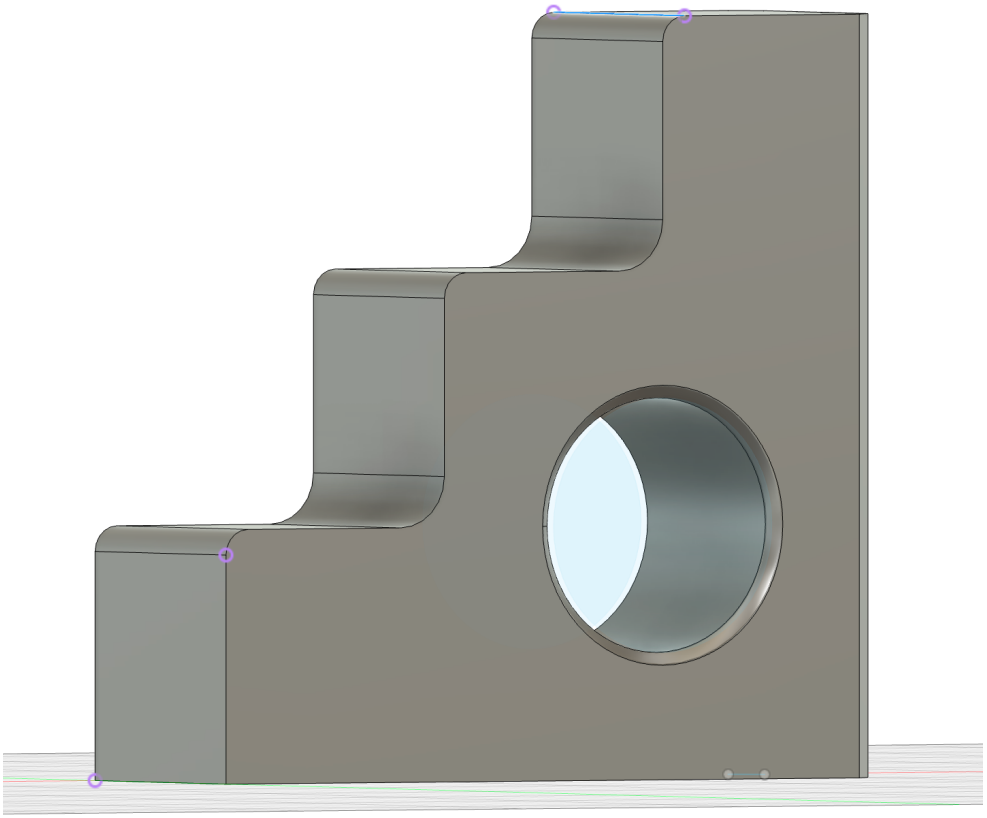
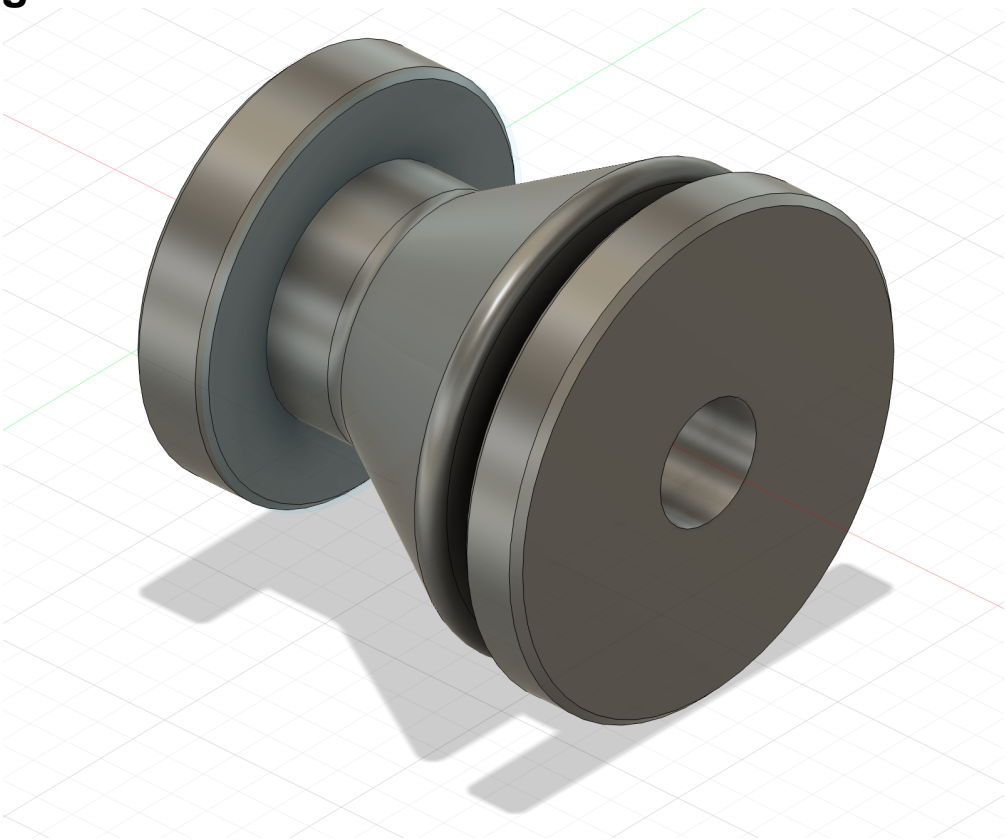
## Assignment Part 2: Revolved Extrusion